RHS301F

Accessories: Heatsinks

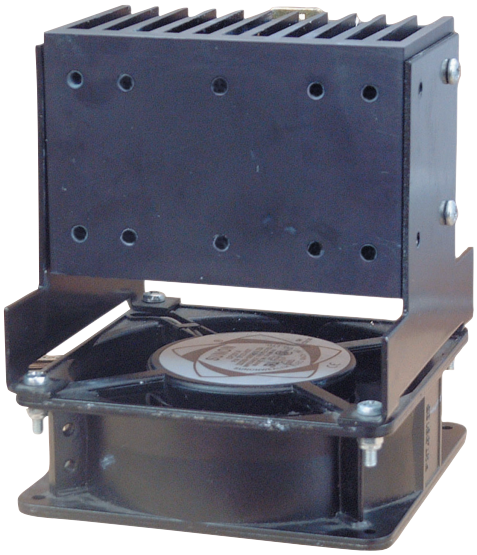

Main features

- 0.28°C/W thermal resistance
- Suitable for mounting of 1-phase SSRs or 3-phase SSRs
- Integrated fan (115VAC or 230VAC)
- DIN rail mounting
- Dimensions W x H x D: 124 x 146 x 122 mm
- RoHS compliant

Description

Heatsink assembly, including fan, suitable for mounting of maximum 2x 1- phase solid state relay (SSR) or 1x 3-phase SSR.
Suffix H10 or H12 (for 115VAC or 230VAC fans respectively) added to SSR part no. refers to factory mounted heatsink. Conditions apply. Please ask your sales representative for further details.

Structure

1-phase SSR

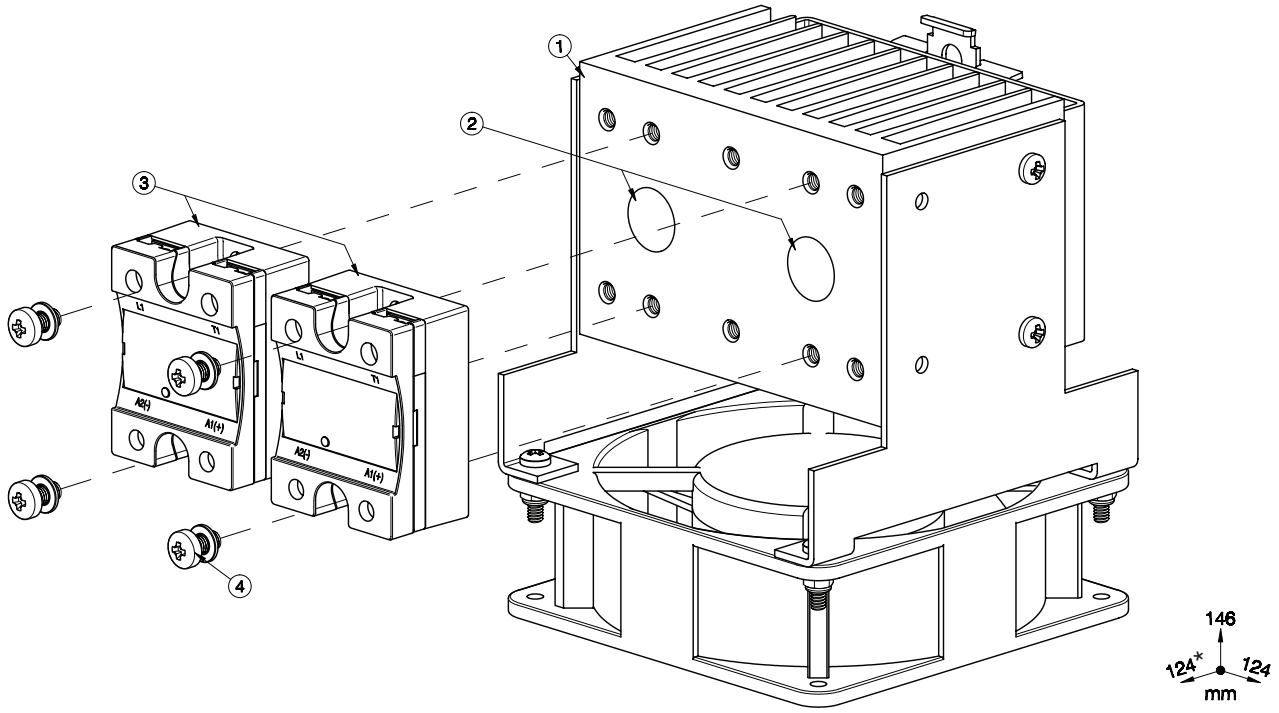

Element	Component	Qty	RHS301F
1	RHS301F heatsink assembly	1	Provided
2	Thermal Compound HTS02S	1	Provided
3	1-phase SSR 45x59mm (max.)	2	Not provided
4	M5x10mm PZ2 + Washer (per SSR)	2	Provided (x4)

Note:
* 128mm for RK..C, 139mm for RK..P (including plug).
Dimensions including the SSR.
When only 1 SSR is utilized it shall be mounted at the centre of the heatsink.

3-phase SSR

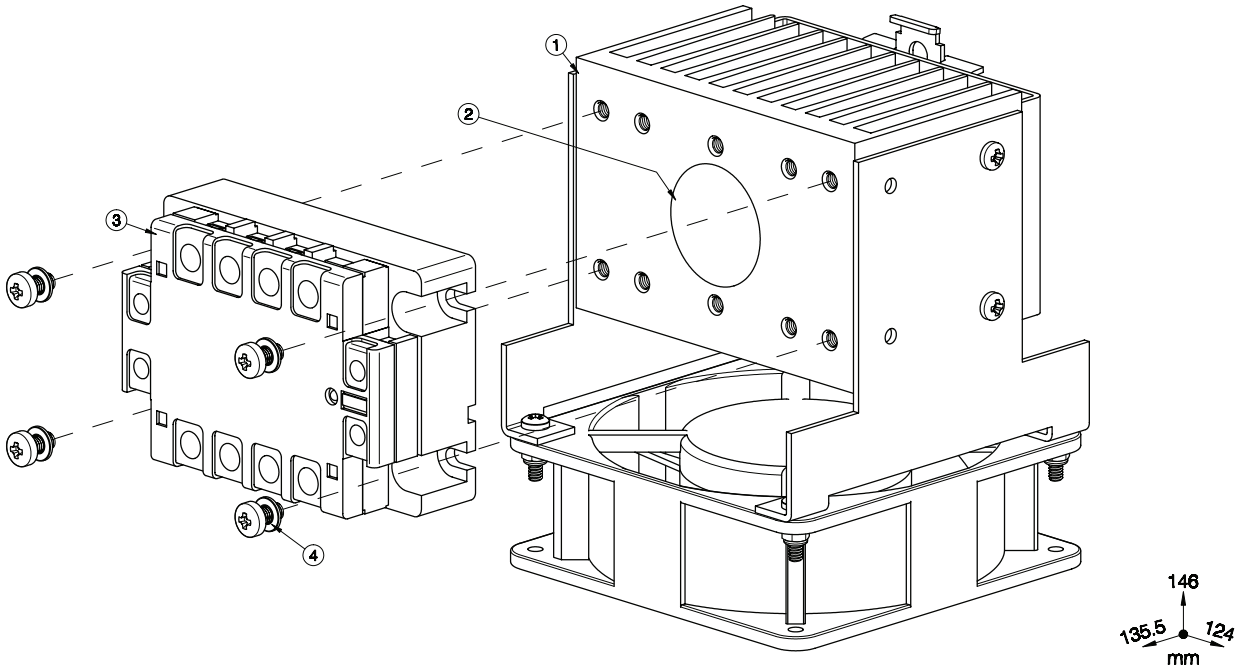

Element	Component	Qty	RHS301F
1	RHS301F heatsink assembly	1	Provided
2	Thermal Compound HTS02S	1	Provided
3	3-phase SSR 104x74mm	1	Not provided
4	M5x10mm PZ2 + Washer (per SSR)	4	Provided (x4)

Dimensions including the SSR.

Features

General

SSR max. mounting torque	1.5Nm (13.3 lb-in)
Weight (excl. SSR)	approx. 1635g
Material	Aluminium
Finish	Black anodization
Fan mounting	Integrated
Fan supply voltage: **RHS301F115C** **RHS301F230C**	 115VAC, 50/60Hz 220 - 240VAC, 50/60Hz
Power consumption: **RHS301F115C** **RHS301F230C**	 20/18 Watts 20/19 Watts

Mounting position

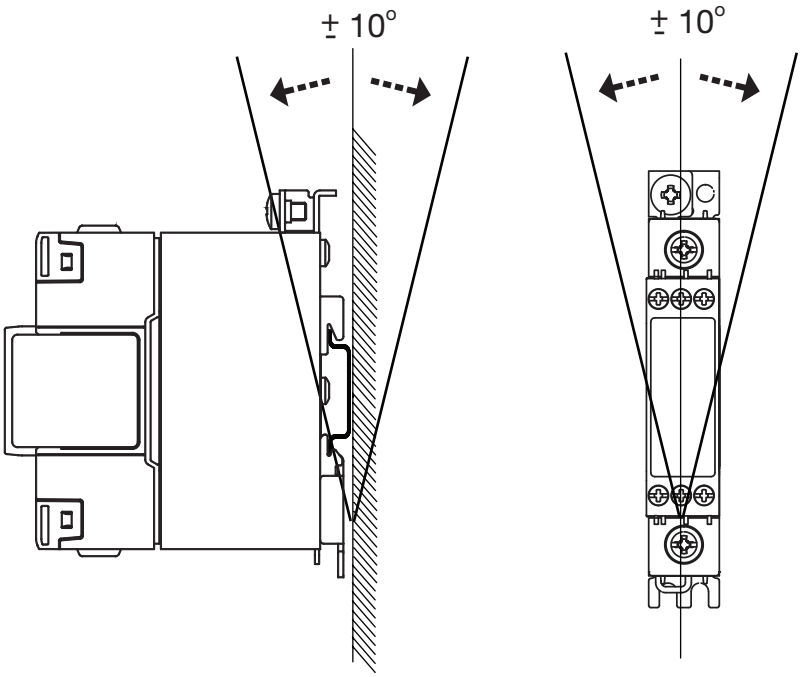

Installation

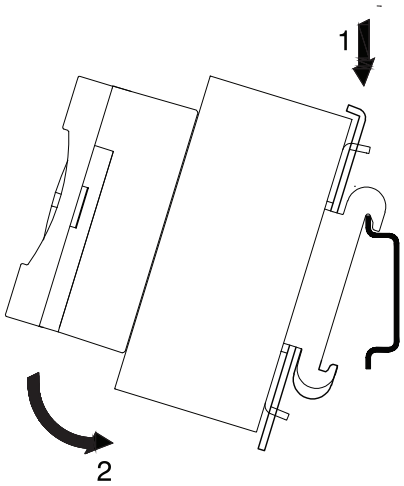

Fig. 1 *Mounting on DIN rail*

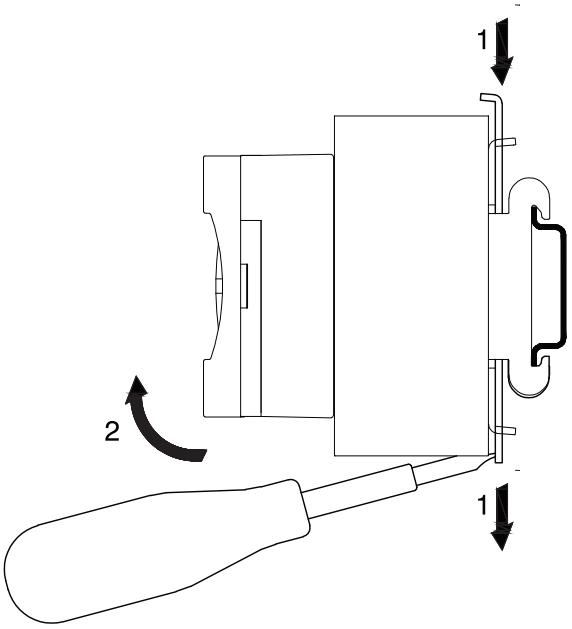

Fig. 2 *Dismounting from DIN rail*

Illustrations are for example only.

Recommended maximum current rating (per SSR)

1. The below recommendations are only valid when the assembly (SSR + heatsink) is mounted as shown in the mounting instructions unless otherwise indicated.
2. The indicated ratings are applicable to one SSR, one pole. Please refer to the online selector tool at www.productselection.net for different load currents, surrounding temperatures or multiple units on one heatsink.
3. These recommendations are applicable only with the indicated Carlo Gavazzi thermal interface material between SSR and heatsink. In case a different thermal interface is utilised these recommendations may no longer be valid.

Pre-attached phase change pad, RKHT

1x 2-pole SSR	Surrounding temperature							
	°C °F	20 68	30 86	40 104	50 122	60 140	70 158	80 176
RK 2.. (per pole)	**50**	50	50	50	50	50	43	34.5
	51	50	50	50	50	50	49	40
	75	75	75	75	75	68.5	58	47

Thermal compound, HTS02S

1x 3-phase SSR	Surrounding temperature						
	°C °F	20 68	30 86	40 104	50 122	60 140	70 158
RZ3A..	**25**	25	25	25	25	24.5	20
	55	50	50	46	41	36.0	31
	75	72.5	69.5	63.5	57.5	51	43

Ratings per pole

Thermal pad, RZHT

1x 3-phase SSR	Surrounding temperature						
	°C °F	20 68	30 86	40 104	50 122	60 140	70 158
RZ3A..	**25**	25	25	25	24	20	16.5
	55	43.5	41.5	38	34	29.5	25.5
	75	63.5	61	55.5	50	44.5	38.5

Thermal compound, HTS02S

1x 1-phase SSR	Surrounding temperature						
	°C	**20**	**30**	**40**	**50**	**60**	**70**
	°F	**68**	**86**	**104**	**122**	**140**	**158**
RD..	**1**	1	1	1	1	1	1
	5	5	5	5	5	5	5
RA..L RA..T	**10**	10	10	10	10	10	10
	25	25	25	25	25	23	19
RA..	**25**	25	25	25	25	25	20.5
	50	48	45.5	40	34.5	28.5	22.5
	90	90	90	81	70	58.5	46.5
	110	110	107.5	95	82	68	54
RA60..	**50**	50	50	50	46.0	38.5	31
RA2A.. (per pole)	**25**	25	25	25	25	25	25
	40	40	40	40	40	35.5	30.5
	25M	25	25	25	25	25	25
	40M	40	40	40	40	36.5	31.5
RS1A..	**10**	10	10	10	10	10	7.5
	25	25	25	25	25	25	25
	40	40	40	40	40	40	40
RS1A..E	**25**	25	25	25	22.5	19	16
	40	39	36.5	32.5	28.5	24.5	20
RM1A.. RM1B.. RM1C..	**25**	25	25	25	25	25	25
	50	50	50	50	50	50	48.5
	75	75	75	75	73	61.5	49
	100	100	100	100	100	93.5	76.5
RM1A60.. RM1B60.. RM1C60.. RM1E60..	**50**	50	50	50	50	47.5	41
RAM1A.. RAM1B.. RM1E..	**25**	25	25	25	25	25	25
	50	50	50	50	50	50	48.5
	75	75	75	75	73	61.5	49
	100	100	95	84.5	73	61.5	49
	125	125	125	120	107	93.5	76.5

Thermal pad, KK071CUT

1x 1-phase SSR	Surrounding temperature						
	°C °F	20 68	30 86	40 104	50 122	60 140	70 158
RD..	**1**	1	1	1	1	1	1
	5	5	5	5	5	5	5
RA..L RA..T	**10**	10	10	10	10	10	10
	25	25	25	25	23	19.5	16.5
RA..	**25**	25	25	25	25	23	18
	50	42.5	40	35.5	30	25	19.5
	90	71.5	68	60	51.5	43	34
	110	82.5	77.5	68	58.5	48.5	38
RA60..	**50**	50	50	44	38.5	32	25.5
RA2A.. (per pole)	**25**	25	25	25	25	25	23
	40	40	40	38.5	34.5	30	25.5
	25M	25	25	25	25	25	23
	40M	40	40	39.5	35.5	31	26.5
RS1A..	**10**	10	10	10	10	9	7
	25	25	25	25	25	25	25
	40	40	40	40	40	40	33.5
RS1A..E	**25**	25	25	22	19.5	16.5	13.5
	40	32.0	36.5	32.5	28.5	24.5	20
RM1A.. RM1B.. RM1C..	**25**	25	25	25	25	25	25
	50	50	50	50	50	44.5	33.5
	75	73	69.5	61	53	44	35
	100	98.5	94	84	70.5	56.5	42
RM1A60.. RM1B60.. RM1C60.. RM1E60..	**50**	50	50	50	45	39.5	34
RAM1A.. RAM1B.. RM1E..	**25**	25	25	25	25	25	25
	50	50	50	50	50	44.5	33.5
	75	73	69.5	61	53	44	35
	100	73	69.5	61	53	44	35
	125	98.5	94	84	70.5	56.5	42

References

CARLO GAVAZZI compatible components

Purpose	Component name/code	Notes
Thermal pads	KK071CUT	Packing qty. 50 pcs, suitable for 1-phase SSRs
Thermal pads	RZHT	Packing qty. 10 pcs, suitable for 3-phase SSR
Phase change thermal pad	RKHT	Packing qty. 10 pcs, suitable for RK series
Thermal compound	HTS02S	2ml syringe of silicone based thermal compound
Screw Kits	SRWKITM5X10MM	Packing qty. 20 pcs.
Fans	RHS301F115, RHS301F230	115 VAC, 230 VAC, 120x120mm including bracket

Further reading

Information	Where to find it
Online heatsink selector tool	http://www.productselection.net/heatsink/heatsinkSelector.php?LANG=UK
Accessories	http://www.productselection.net/Pdf/UK/SSR_Accessories.pdf

Order code

RHS301F□C

Enter the code entering the corresponding option instead of □

Code	Option	Description
R	-	
H	-	
S	-	
3	-	
0	-	
1	-	
F	-	
□	115	For 115VAC fan
	230	For 230VAC fan
C	-	

COPYRIGHT ©2016
Content subject to change. Download the PDF: www.productselection.net