Solid State Relays
1-Phase Integrated Heatsink
Integrated Current Monitoring
Types RGC1S



- **Product width ranging from 22.5mm to 70mm**
- **Partial load failure detection**
- **Zero cross switching**
- **Ratings up to 600VACrms & 85AACrms @ 40°C**
- **Up to 18000A²s for I²t and 1200Vp for blocking voltage**
- **Control voltage range: 4 - 32 VDC**
- **Local or remote current set-point**
- **LED indications for the different faults**
- **Alarm signal output for SSR or load circuit malfunction**
- **IP20 protection**
- **Integrated voltage transient protection with varistor**
- **RoHS compliant**
- **Short circuit current rating 100kArms**

Product Description

This slim RG design is capable of detecting various failure modes occuring to the heaters and also to the product itself. Failures which can be detected include partial load failure, heater loss, open circuit SSR, short circuit SSR and SSR over temperature. A normally closed, potential free alarm, opens in the event of a system or power semiconductor fault.

A load current setpint has to be TEACHed to the SSR either locally by the TEACH button on the front of the device or remotely through the provided terminal.

This product is available either with integrated heatsink (RGC1S series) and also without heatsink (RGS1S series). The minimum product width is 22.5mm. The control and auxiliary terminals are double box clamps to facilitate safe looping whilst the power terminals are either screw terminals or box clamps depending on the model selected.

Ordering Key

RGC 1 S 60 D 30 G K E P _

- **Solid state relay**
- **Number of poles**
- **Switching mode**
- **Rated operational voltage**
- **Control voltage**
- **Rated operational current**
- **Connection type for control**
- **Connection type for power**
- **Connection configuration**
- **Protection**
- **Options**

Note: Specifications stated at 25°C unless specified.

Ordering Key

1-Phase SSR	Switching mode	Rated V, Blocking V*	Control voltage	Rated current[1] @ 40°C I²t data	Connection input	Connection output	Connection configuration	Protection
RGC1: with heatsink	S: Zero cross with current sensing	60:600VAC +10% -15%, 1200Vp	D: 4-32VDC	20: 23AAC, 525A²s 25: 25AAC, 1800A²s 26: 25AAC, 18000A²s 30: 30AAC, 1800A²s 31: 30AAC, 6600A²s 41: 43AAC, 18000A²s 61: 65AAC, 18000A²s 90: 85AAC, 18000A²s	G: Box Clamp	K: Screw G: Box Clamp	E: Contactor U: SSR	P: Over-temperature protection

* Rated voltage, Blocking voltage
1: refer to derating curves

Selection Guide

Rated output voltage, Blocking voltage	Connection control/ power	Control voltage	Configuration	Rated operational current (I^2t value in brackets) 23AAC (525A^2s)	25AAC (1800A^2s)	30AAC (1800A^2s)	30AAC (6600A^2s)
600VAC, 1200Vp	Box Clamp/ Screw	4 - 32VDC	E	RGC1S60D20GKEP	RGC1S60D25GKEP	RGC1S60D30GKEP	RGC1S60D31GKEP

Rated output voltage, Blocking voltage	Connection control/ power	Control voltage	Configuration	Rated operational current (I^2t value in brackets) 25AAC (18000A^2s)	43AAC (18000A^2s)	65AAC (18000A^2s)	85AAC (18000A^2s)
600VAC, 1200Vp	Box Clamp/	4 - 32VDC	E	RGC1S60D26GGEP	RGC1S60D41GGEP	RGC1S60D61GGEP	RGC1S60D90GGEP
	Box Clamp		U	-	RGC1S60D41GGUP	RGC1S60D61GGUP	-

Output Voltage Specifications

Operational Voltage Range	42-600 VAC +10% -15% on max
Blocking Voltage	1200 Vp
Internal Varistor	625V

Output Specifications

	RGC1S..20	RGC1S..25	RGC1S..26	RGC1S..30	RGC1S..31	RGC1S..41	RGC1S..61	RGC1S..90
Rated operational current [2] AC-51 @ Ta=25°C	25.5 AAC	27 AAC	30 AAC	30 AAC	30 AAC	50 AAC	75 AAC	85 AAC
AC-51 @ Ta=40°C	23 AAC	25 AAC	25 AAC	30 AAC	30 AAC	43 AAC	65 AAC	85 AAC
Minimum TEACH Current[3]	1.2 AAC	1.2 AAC	1.2 AAC	1.2 AAC	1.2 AAC	1.2 AAC	5 AAC	5 AAC
Minimum partial load current	0.2 AAC	0.2 AAC	0.2 AAC	0.2 AAC	0.2 AAC	0.2 AAC	0.83 AAC	0.83 AAC
Detectable partial load failure	>16.67% from current setpoint for more than 120ms							
Rep. overload current - UL508, PF=0.9 TAMB=40°C, tON=1s, tOFF=9s, 50cycles	60 AAC	60 AAC	60 AAC	84 AAC	84 AAC	126 AAC	168 AAC	168 AAC
Max.off-state leakage current	3 mAAC	3 mAAC	3 mAAC	3 mAAC	3 mAAC	3 mAAC	3 mAAC	3 mAAC
Max. Transient Surge Current (Itsm) t=10ms	325 Ap	600 Ap	1900 Ap	600 Ap	1150 Ap	1900 Ap	1900 Ap	1900 Ap
I^2t for fusing (t=10ms) Minimum	525 A^2s	1800 A^2s	18000 A^2s	1800 A^2s	6600 A^2s	18000 A^2s	18000 A^2s	18000 A^2s
Critical dv/dt (@ Tj init = 40°C)	1000 V/us	1000 V/us	1000 V/us	1000 V/us	1000 V/us	1000 V/us	1000 V/us	1000 V/us

2: refer to derating curves

3: refer to EMC specifications

Specifications are subject to change without notice (14.11.2016)

General Specifications

Latching voltage (across L1-T1)	≤ 20 VAC
Operational frequency range	45 - 65 Hz
Power factor	> 0.9 @ Vrated
Touch protection	IP20
LEDs status indication Supply ON Control ON Load ON Fault	 Green, half intensity Green, full intensity Yellow Red [4]

Pollution degree	2 (non-conductive pollution with possibilities of condensation)
Over-voltage category	III (fixed installations)
Isolation Input to Output IN1, IN2, A1+, A2- to L1, T1	 2500Vrms
Alarm to Output 11+, 12- to L1 , T1	 2500Vrms
Alarm to Input 11+, 12- to A1+, A2-, IN1, IN2	 500Vrms
Input & Output to Case	4000Vrms

Supply Specifications (A1+, A2-)

Rated supply voltage	24 VDC -15%, +20%
Reverse protection	Yes
Max. supply current	50 mA
Fan supply RGC1S..90	Supplied directly to fan 24VDC +/-10%, 50mA nominal

Remote TEACH Specifications (IN1)

Control voltage range[5]	4 - 32 VDC
Input current	refer to chart
Reverse protection	Yes

Alarm Specifications (11+, 12-)

Output Type	PNP Open Collector
Normal State[6]	Normally Closed
Maximum rating	35Vdc, 50mADC
Visual Indication	Red LED[4]
Alarm output onstate voltage	refer to chart

Control Specifications (IN2)

Control voltage range[5,7]	4 - 32 VDC
Pick-up voltage	3.8 VDC
Drop-out voltage	1 VDC
Maximum reverse voltage	32 VDC
Input current	refer to chart
Max Response time pick-up	0.5 cycle + 500us @ 24VDC
Min Response time drop-out	0.5 cycle + 500us @ 24VDC

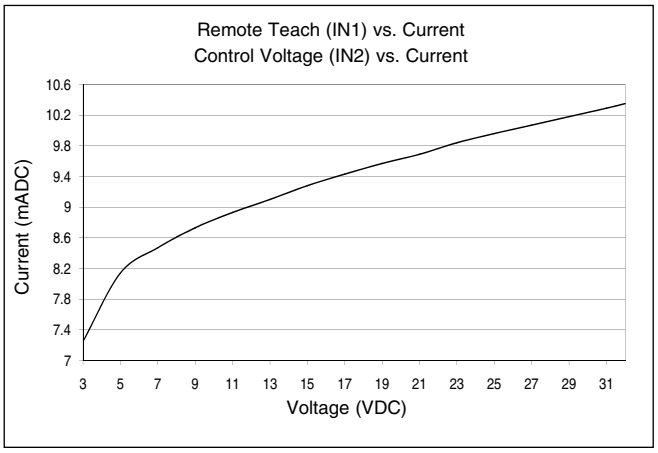

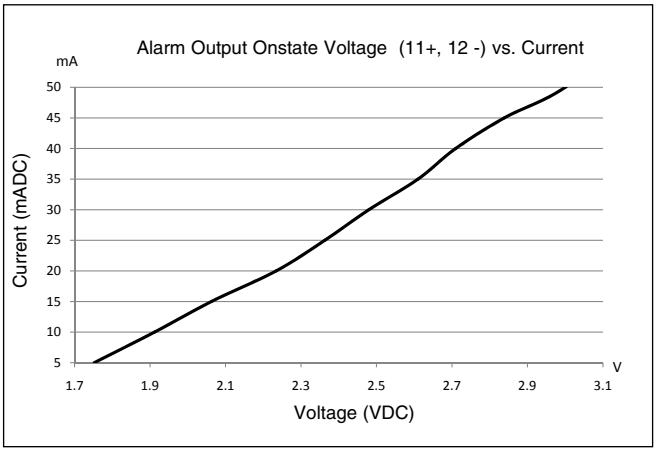

4: Refer to Alarm LED Indications
5: DC control to be supplied by a Class 2 power source
6: The alarm will open in the case when the power supply is removed
7: A partial load failure will not be detected if the ON time is less than 120ms

Output Power Dissipation

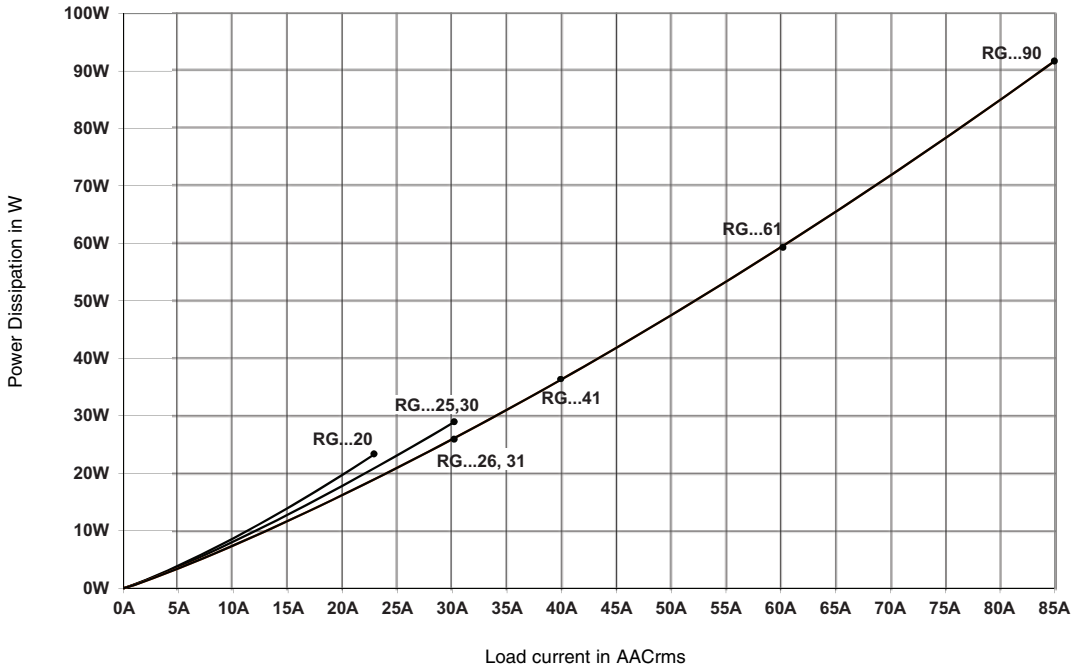

Current Derating (UL508)

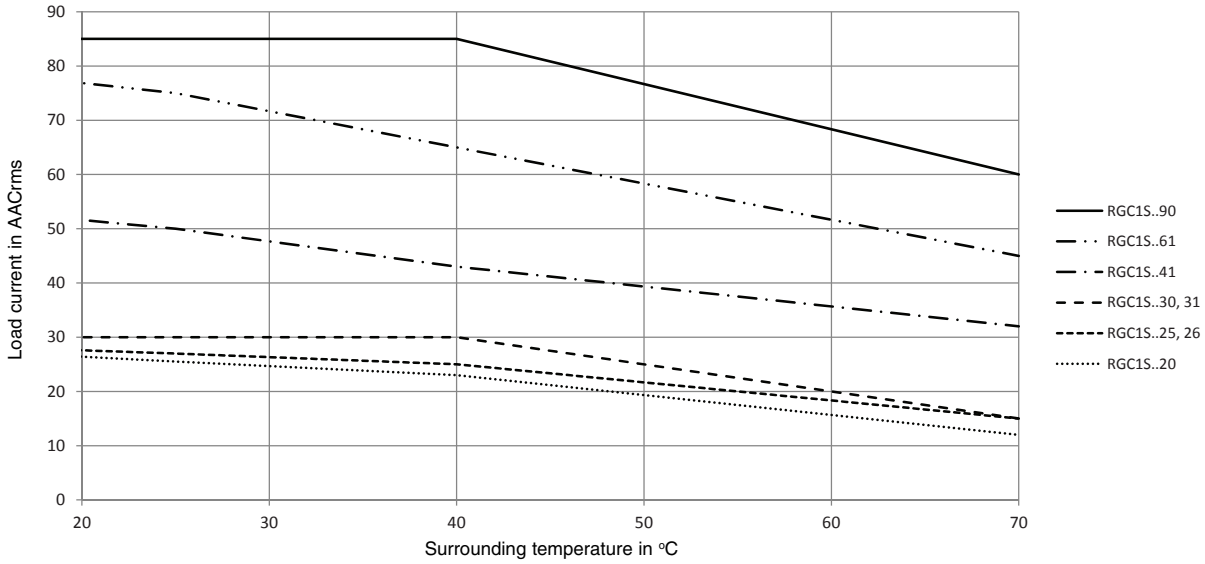

Derating vs. Spacing Curves

RGC1S.. 20

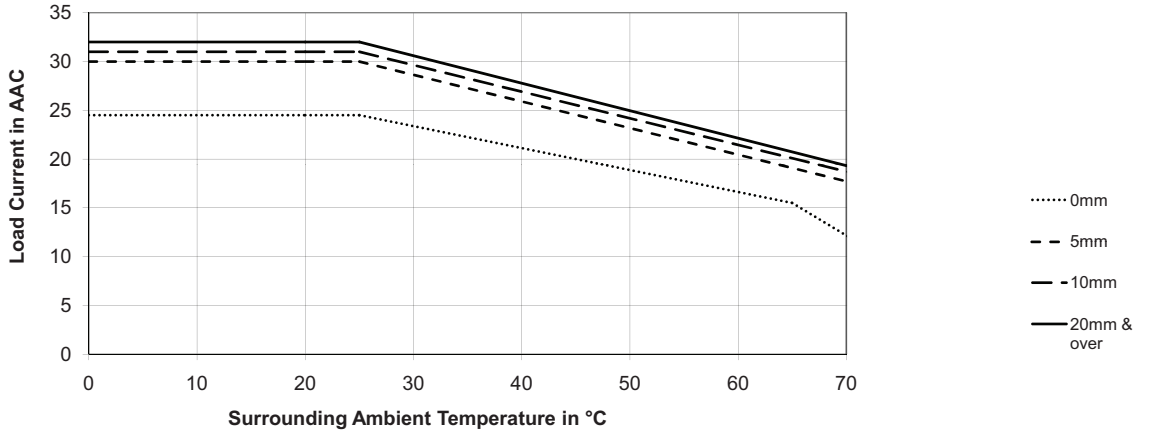

RGC1S.. 25, RGC1S..26

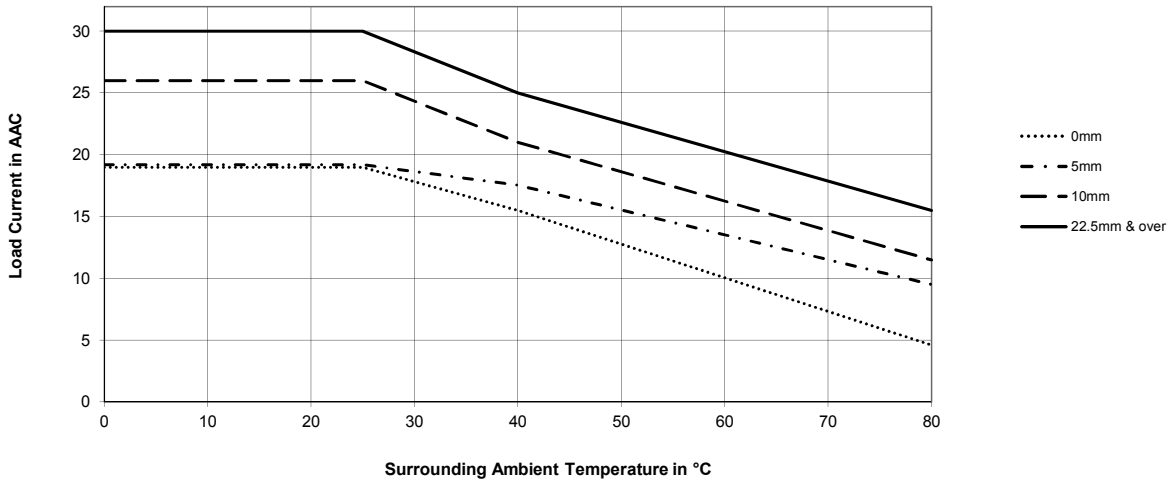

Derating vs. Spacing Curves

RGC1S.. 30, RGC1S..31

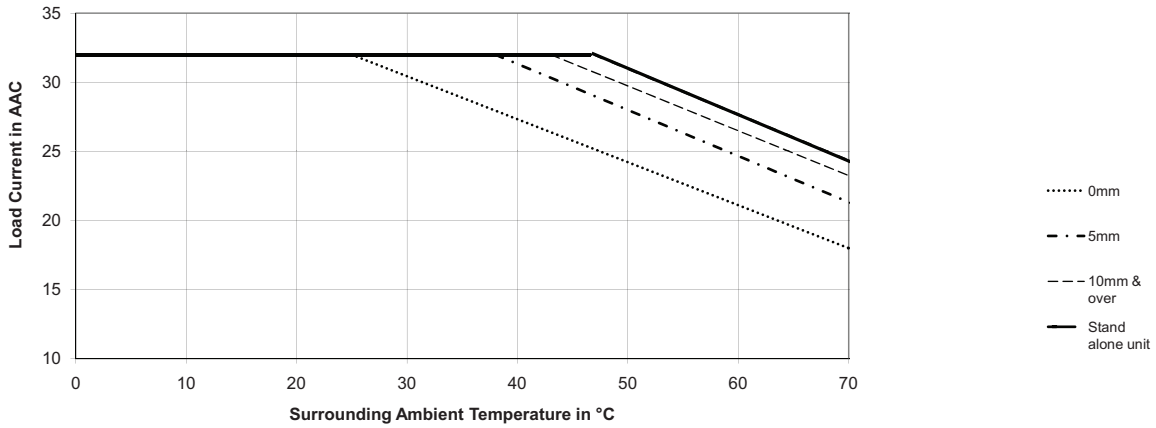

RGC1S.. 41

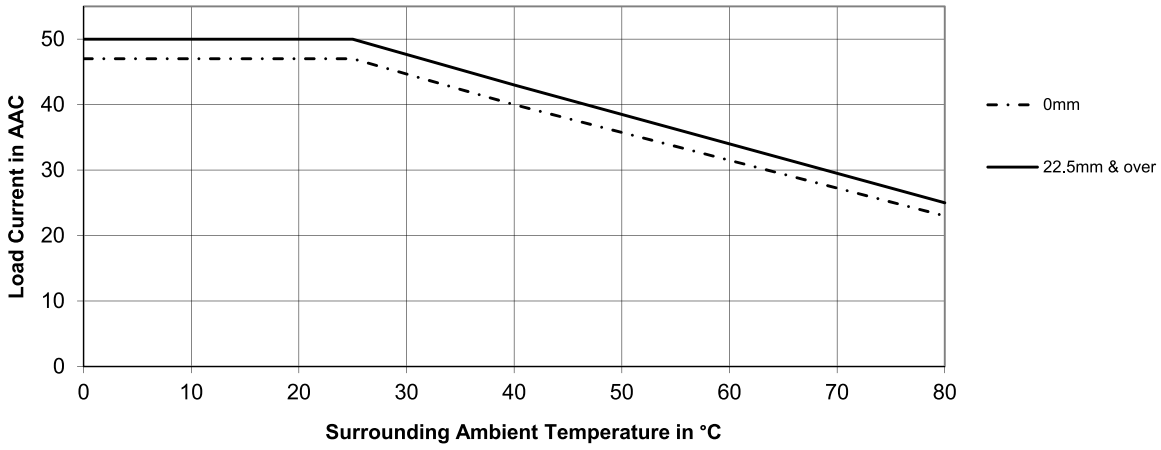

Derating vs. Spacing Curves

RGC1S.. 61

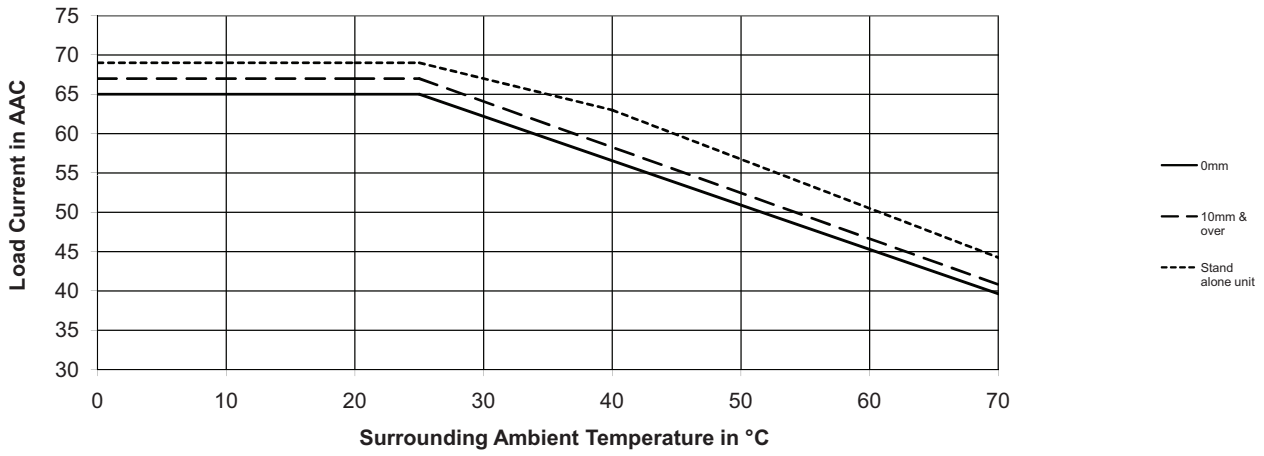

RGC1S.. 90

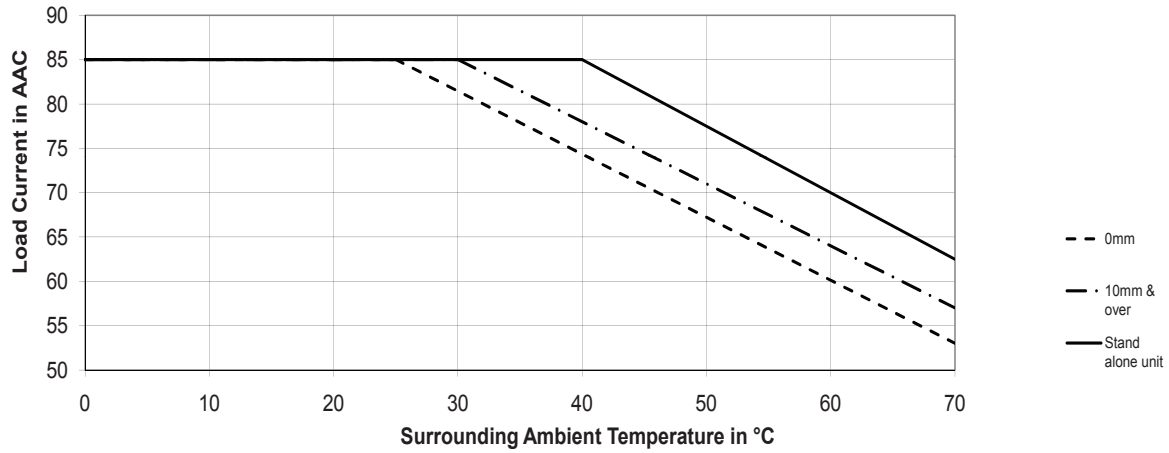

Terminal Markings

RG...20GKEP
RG...25GKEP
RG...26GGEP
RG...30GKEP
RG...31GKEP



RG...41GGEP
RG...61GGEP
RG...90GGEP

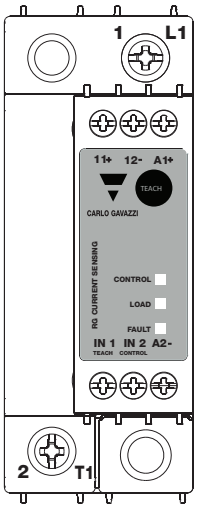

RG...41GGUP
RG...61GGUP

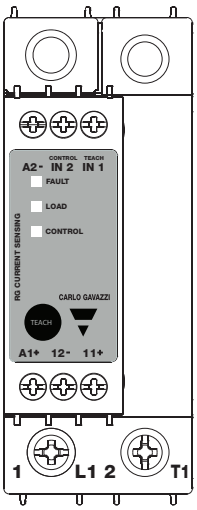

1 L1 : Line connection
2 T1 : Load connection
11+ : Alarm supply
12- : Alarm output
A1+ : Supply voltage
A2- : Ground connection
IN 1 : Remote TEACH signal
IN 2 : Control voltage

Note:
- Local TEACH by pressing front button for more than 3 sec but less than 5 sec
- Fan supply (24VDC) for RGC1A60D90GGEP has to be supplied directly to fan

Connection Diagram

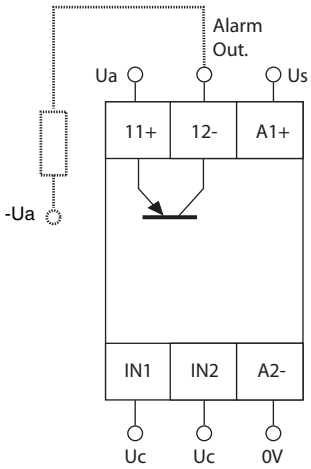

Uc: 4 - 32 VDC
Us: 24 VDC
Ua: max. 35 VDC
Alarm Output: max. 50mA

Specifications are subject to change without notice (14.11.2016)

Connection Diagram for Separate Alarm Outputs

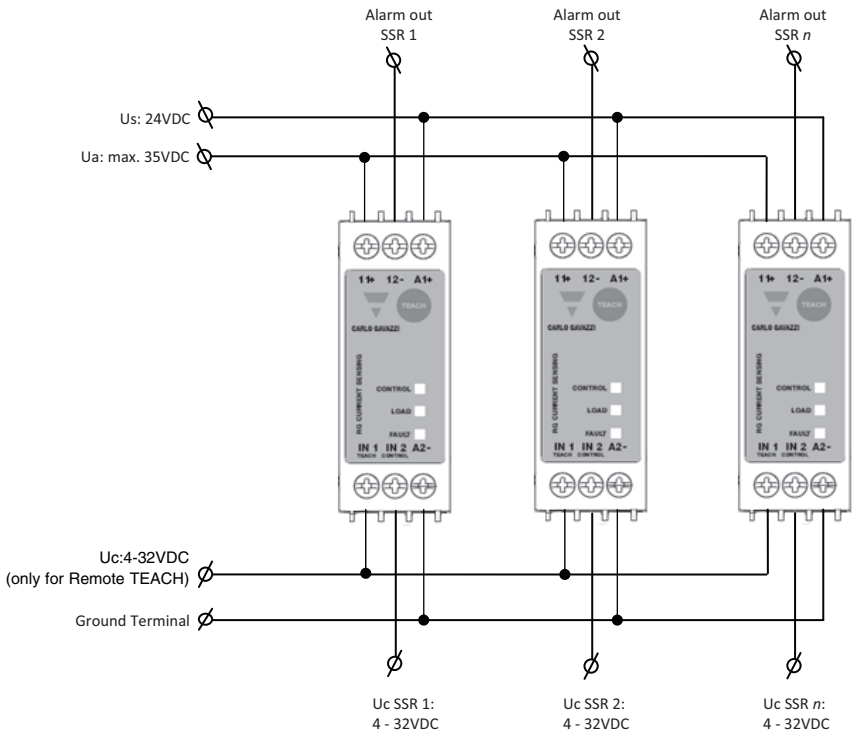

Connection Diagram for Series Alarm Outputs

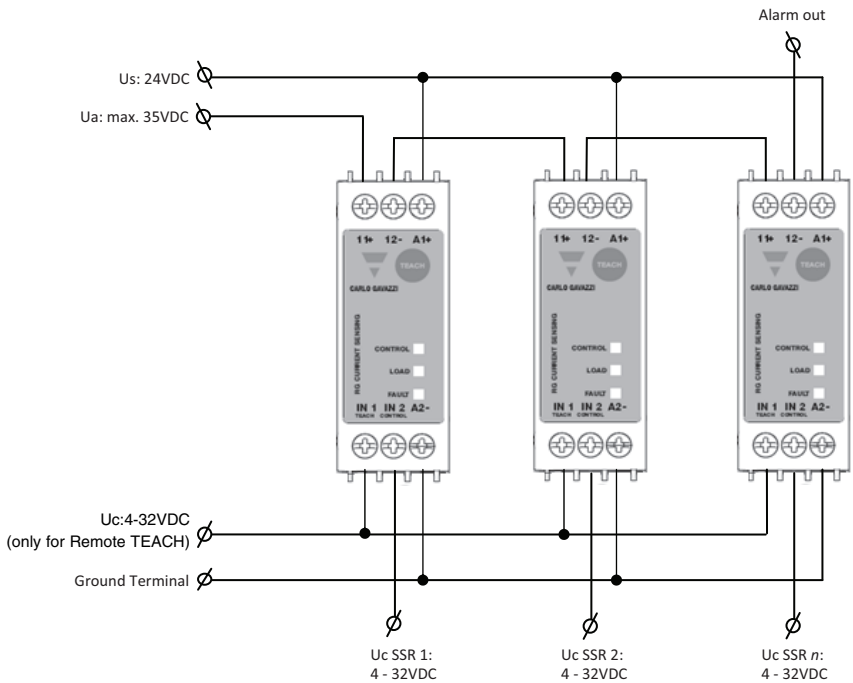

Alarm LED Indications (Red LED)

Flashes	Description of Fault	Timing Diagram
1	Locked TEACH	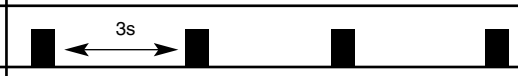
2	Open SSR / Heater	
3	SSR Overtemperature	
4	SSR Short Circuit	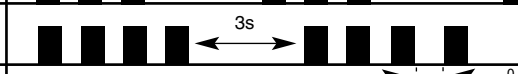
50%	No TEACH setpoint	
100%	Partial Load Failure	

Mode of Operation

Introduction:

The RGC1S must have a stored current setpoint to operate as a Solid State Relay with a Sensing function. The current setpoint is the nominal operating current that is expected through the SSR when all heater loads are functioning properly. The SSR is shipped without having a stored setpoint. This current setpoint is to be stored upon a TEACH procedure as explained below. The wrong setpoint is stored if heater loads are faulty or mains supply voltage is not close to operating voltage during the TEACH procedure.

Caution: In case of a brand new RGC1S (i.e. an RGC1S that does not have a stored current set point), a TEACH procedure on no load (i.e., no load connected to the RGC1S load terminal 2/T1) will result in a stored current set point of 0A.

SSR Operation without the TEACH procedure

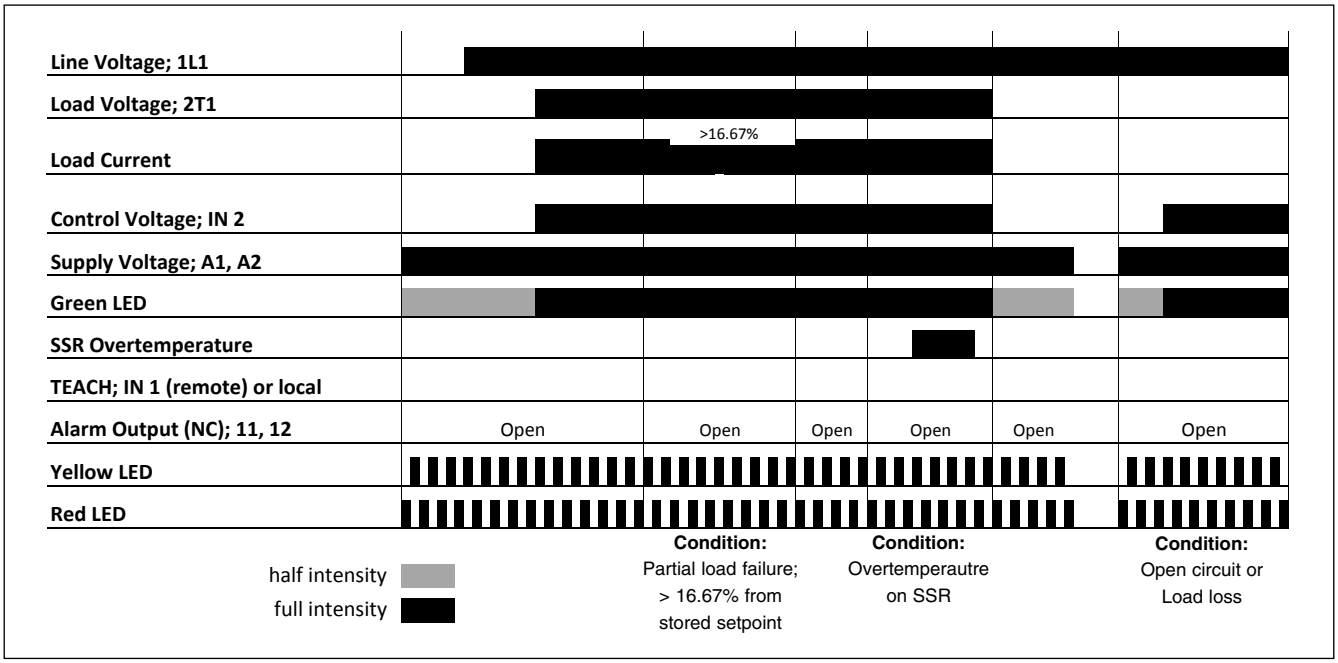

Upon application of supply voltage, the yellow and red LED will flash continuously in sequence (i.e., scroll) indicating that the device has no current setpoint stored. The green LED is ON at half intensity indicating the presence of supply voltage. As soon as control voltage is applied the green LED will be ON at full intensity. The alarm output, which is normally closed, is open to indicate that the SSR has no stored setpoint.

If mains supply is present upon application of control voltage the SSR will switch ON despite having no stored current setpoint. However, even though the SSR switches ON, the Sensing features associated with the RGC1S are disabled as shown in the above operations diagram. The Sensing features will be enabled ONLY once the TEACH procedure explained below is completed.
For SSR to switch ON upon application of control voltage, supply voltage has to be present across terminals A1, A2.

Mode of Operation (cont.)

The TEACH procedure

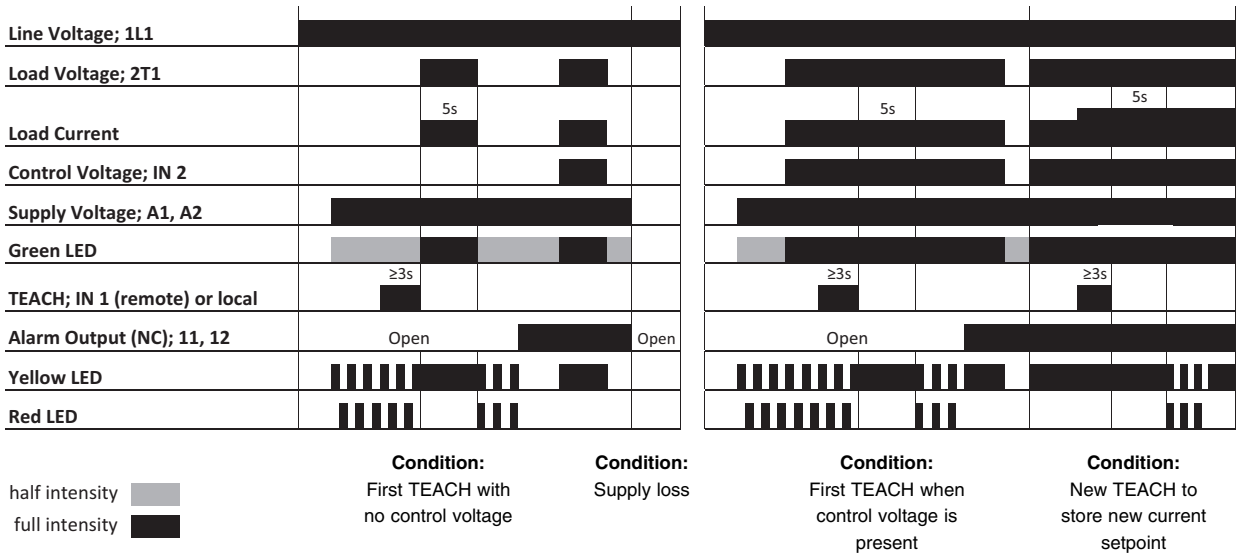

The TEACH procedure can be performed either locally or remotely. For local TEACH, the front 'TEACH' button on the SSR has to be pressed for at least 3 seconds (but less than 5 seconds). Remote TEACH can be performed by applying a high signal on terminal IN 1 for a duration of at least 3 seconds (but less than 5 seconds).

Supply voltage has to be present across terminals A1, A2 for the TEACH function to be performed and SSR to operate.

TEACH in the absence of a control signal
It is possible to TEACH the SSR without the presence of a control signal. In case of no previous stored setpoint (factory default), red and yellow LED will flash accordingly indicating this. The TEACH function will start as soon as the push button is released. The SSR will switch fully ON for 5 seconds (yellow LED ON during these 5 seconds) at the end of which, a load current setpoint is recorded. If TEACH procedure is successful the yellow and red LED will blink together for three times to indicate a successful setpoint measurement. The alarm output across terminals 11, 12 closes indicating a normal situation.

In case of an unsuccessful TEACH, the red & yellow LED will scroll continously indicating that no current setpoint is stored. If load current does not stabilise during the 5 seconds TEACH sequence, it will not be possible to store setpoint. Another attempt to do a TEACH may be done until setpoint is recorded.

TEACH when control signal is present
In this case the TEACH procedure is identical to the TEACH procedure when there is no control signal. During the 5 seconds TEACH the status of the load switching will not be distinguished from unTEACHed state since load was ON before TEACH. Load remains ON as long as control voltage is present.

If SSR is in a LOCKed position (see below) it will not be possible to perform a new TEACH. SSR has to be unLOCKed first.

Mode of Operation (cont.)

Fault Conditions

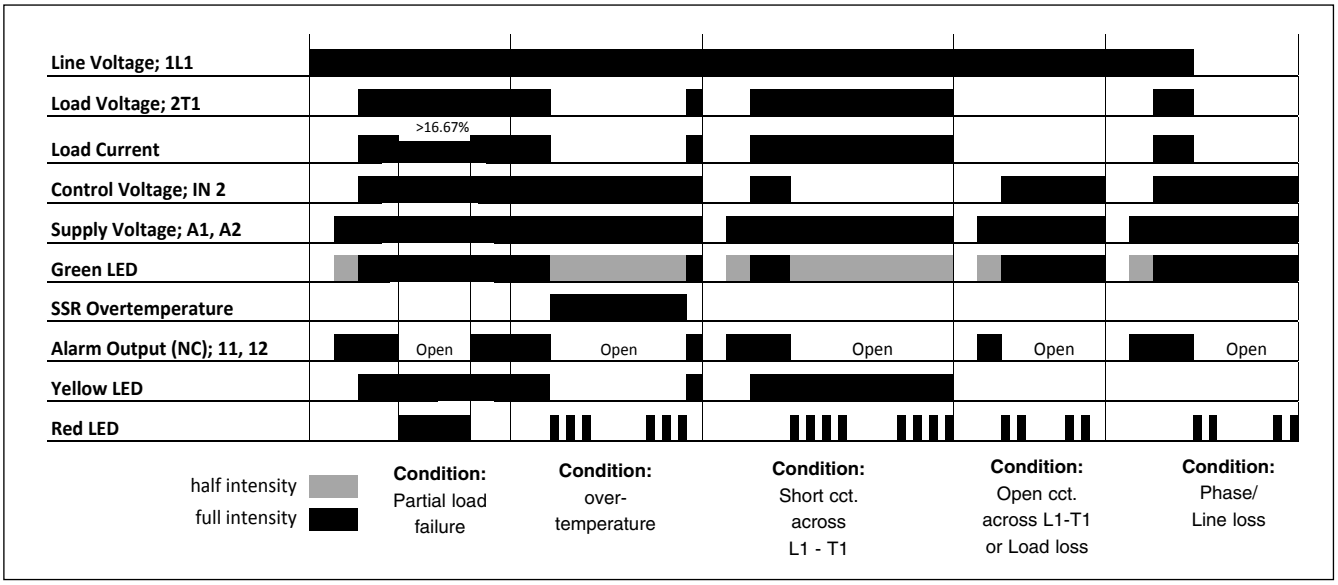

Partial Load Failure
This occurs when the load current decreases by more than 16.67% as compared to the stored setpoint. During this failure mode the SSR remains ON but alarm output opens to indicate an alarm condition. The red LED is continuously ON during this condition. If current rises back to normal levels the alarm indications switch to the normal state.

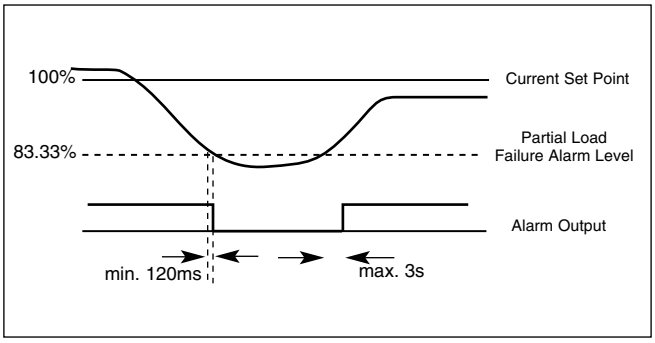

Over Temperature
If the SSR derating curve is exceeded during normal operation, an over-temperature condition is detected and the SSR output switches OFF. A visual alarm is indicated by the red blinking LED (3 flashes - see details in ALARM LED INDICATIONS) and alarm signal opens. The alarm resets automatically when the overtemperature condition is no longer present.

SSR Short Circuit
This condition is detected in the absence of a control signal and load current (in the region of 800mA and over) still flowing through the SSR. A visual indication is given by the red blinking LED (4 flashes - see details in ALARM LED INDICATIONS) and open alarm across terminals 11, 12. The yellow LED stays ON even though the green LED is at half intensity (i.e. absence of control input voltage) to indicate status of load.

SSR Open Circuit / Heater Loss / Line Loss
SSR output remains OFF even after application of the control voltage on terminal IN 2. A visual indication is given by the red blinking LED (2 flashes - see details in ALARM LED INDICATIONS) and open alarm across terminals 11, 12.

Alarm auto reset
In all alarm conditions described above, the alarm LED and signal output from terminals 11, 12 reset automatically to the normal condition as soon as the alarm condition is no longer present. There is no need for an alarm reset.

Other functions: TEACH LOCK/UNLOCK
The device can be locked to prevent undesirable local TEACH. This can be done by sending a pulse with a duration between 1s and 1.5s to the remote TEACH terminal IN 1. To TEACH a LOCKed unit, a pulse with duration between 1s and 1.5s has to be applied first to terminal IN 1, before performing the TEACH.The initial condition of the unit after every power up (through A1, A2 terminals) is UNLOCKed.

Specifications are subject to change without notice (14.11.2016)

Agency Approvals and Conformances

Conformance & Approvals	EN/IEC 60947-4-3 EN/IEC 62314 UL508 Listed (E172877) cUL Listed (E172877)
Short Circuit Current Rating	100kA, UL508

Electromagnetic Compatibility

EMC Immunity	EN 60947-4-3
Electrostatic Discharge (ESD) Immunity	IEC/EN 61000-4-2
Air discharge, 8kV	Performance Criteria 1
Contact, 4kV	Performance Criteria 1
Electrical Fast Transient (Burst) Immunity	IEC/EN 61000-4-4
Output: 2kV, 5kHz	Performance Criteria 2
Input: 1kV, 5kHz	Performance Criteria 1
Electrical Surge Immunity	IEC/EN 61000-4-5
Output, line to line, 1kV	Performance Criteria 1
Output, line to earth, 2kV	Performance Criteria 1
DC lines, line to line, 500V	Performance Criteria 2
DC lines, line to earth, 500V	Performance Criteria 2
Signal lines, line to earth, 1kV	Performance Criteria 2

Radiated Radio Frequency Immunity	IEC/EN 61000-4-3
10V/m, 80 - 1000 MHz	Performance Criteria 1
10V/m, 1.4 - 2 GHz	Performance Criteria 1
3V/m, 2 - 2.7 GHz	Performance Criteria 1
Conducted Radio Frequency Immunity	IEC/EN 61000-4-6
10V/m, 0.15 - 80 MHz	Performance Criteria 1
Voltage Dips Immunity	IEC/EN 61000-4-11
0% for 0.5, 1 cycles	Performance Criteria 2
40% for 10 cycles	Performance Criteria 2
70% for 25 cycles	Performance Criteria 2
80% for 250 cycles	Performance Criteria 2
Voltage Interruptions Immunity	IEC/EN 61000-4-11
0% for 5000ms	Performance Criteria 2

EMC Emission	EN 60947-4-3
Radio Interference Voltage Emission (Conducted)	IEC/EN60947-4-3
0.15 - 30MHz	Class A (no filtering needed) IEC/EN 55011, Class A (industrial) with filters - see filter information

Radio Interference Field Emission (Radiated)	IEC/EN 55011
30 - 1000MHz	Class A (industrial)

Note:

- Control input lines must be installed together to maintain products' susceptability to Radio Frequency interference.
- Use of AC solid state relays may, according to the application and the load current, cause conducted radio interferences. Use of mains filters may be necessary for cases where the user must meet E.M.C requirements. The capacitor values given inside the filtering specification tables should be taken only as indications, the filter attenuation will depend on the final application.
- Performance Criteria 1: No degradation of performance or loss of function is allowed when the product is operated as intended.
- Performance Criteria 2: During the test, degradation of performance or partial loss of function is allowed. However when the test is complete the product should return operating as intended by itself.
- Performance Criteria 3: Temporary loss of function is allowed, provided the function can be restored by manual operation of the controls.

Filtering - EN / IEC 55011 Class A compliance (for class B compliance contact us)

Part Number	Suggested filter for compliance	Maximum Heater current
RGC1S60D20GKEP	100 nF / 760V / X1	20 AAC
RGC1S60D25GKEP	220nF / 760V / X1	25 AAC
RGC1S60D26GGEP	330nF/ 760V / X1	25 AAC
RGC1S60D30GKEP	220 nF / 760V / X1	30 AAC
RGC1S60D31GKEP	220 nF / 760V / X1	30 AAC
RGC1S60D41GG.P	330 nF / 760V / X1	40 AAC
RGC1S60D61GG.P	470 nF / 760V / X1	65 AAC
RGC1S60D90GGEP	470 nF / 760V / X1	65 AAC

Filter Connection Diagrams

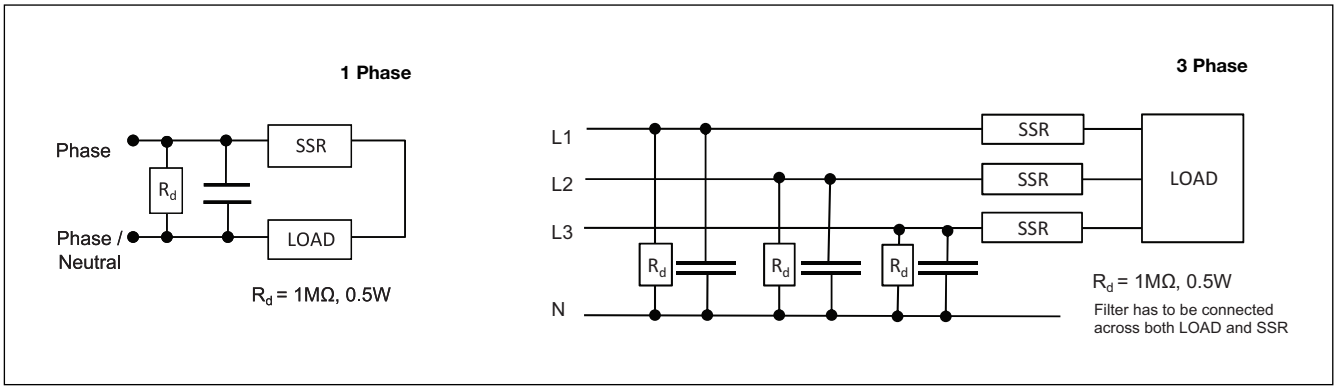

Environmental Specifications

Operating Temperature	-25°C to 70°C (-13˚F to +158˚F)
Storage Temperature	-40°C to 100°C (-40˚F to +212˚F)
RoHS (2011/65/EU)	Compliant
Impact resistance (EN50155, EN61373)	15/11 g/ms
Vibration resistance (2-100Hz, IEC60068-2-6, EN50155, EN61373)	2g per axis
Relative humidity	95% non-condensing @ 40˚C
UL flammability rating (housing)	UL 94 V0
Installation altitude	0-1000m. Above 1000m derate linearly by 1% of FLC per 100m up to a maximum of 2000m

Weight

RGC1S..20..	approx. 361g	**RGC1S..41..**	approx. 583g
RGC1S..25.., RGC1S..26..	approx. 344g	**RGC1S..61..**	approx. 974g
RGC1S..30.., RGC1S..31..	approx. 414g	**RGC1S..90..**	approx. 1102g

Connection Specifications

POWER CONNECTIONS: 1/L1, 2 /T1 Use 75°C copper (Cu) conductors	**RG..20, 25, 30, 31GKEP**		**RG..26GGEP**	**RG..41GG.P; RG..61GG.P; RG..90GGEP**
Stripping Length (X)	12mm		11mm	
Connection type	M4 screw with captivated washer		M5 screw with box clamp	
Rigid (Solid & Stranded) UL/ cUL rated data 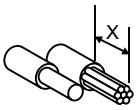	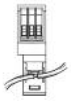 2 x 2.5..6 mm² 2 x 14.. 10 AWG	 1 x 2.5..6 mm² 1 x 14.. 10 AWG		 1 x 2.5..25mm² 1 x 14...3 AWG
Flexible with end sleeve 	2 x 1.0 ... 2.5mm² 2 x 2.5..4mm² 2 x 18.. 14 AWG 2 x 14.. 12 AWG	1 x 1.0..4mm² 1 x 18.. 12 AWG		1 x 2.5..16mm² 1 x 14.. 6 AWG
Flexible without end sleeve 	2 x 1.0 ... 2.5mm² 2 x 2.5.. 6mm² 2 x 18.. 14 AWG 2 x 14.. 10 AWG	1 x 1.0.. 6mm² 1 x 18.. 10 AWG		1 x 4.. 25mm² 1 x 12.. 3 AWG
Torque specifications 	Pozidriv 2 UL : 2Nm (17.7lb-in.) IEC: 1.5 - 2.0Nm (13.3 - 17.7lb-in)			Pozidriv 2 UL: 2.5Nm (22lb-in.) IEC: 2.5 - 3.0Nm (22 - 26.6lb-in)
Aperture for termination lug	12.3mm			N/A
Protective Earth Connection 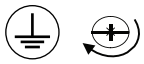	M5, 1.5Nm (13.3 in-lb)			

Note: M5 PE screw not provided with SSR. PE connection required when product is intended to be used in Class 1 applications according to EN/IEC 61140.

CONTROL CONNECTIONS: Use 60/75°C copper (Cu) conductors	**A1(+), A2(-), IN1, IN2, 11 (+), 12(-)**	
Torque specifications 	M3, Pozidriv 1 UL: 0.5Nm (4.4lb-in) IEC: 0.4 - 0.5Nm (3.5 - 4.4lb-in)	
Stripping Length (X)	6mm	13mm
Rigid (Solid & Stranded) UL/ cUL rated data 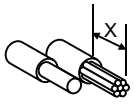	 2 x 1.0..2.5mm² 2 x 18..14 AWG	 1 x 1.0..2.5mm² 1 x 18..14 AWG
Flexible with end sleeve 	2 x 1.0..2.5mm² 2 x 18..14AWG	1 x 1.0..2.5mm² 1 x 18..14AWG

Dimensions

RGC1S60D20GKEP

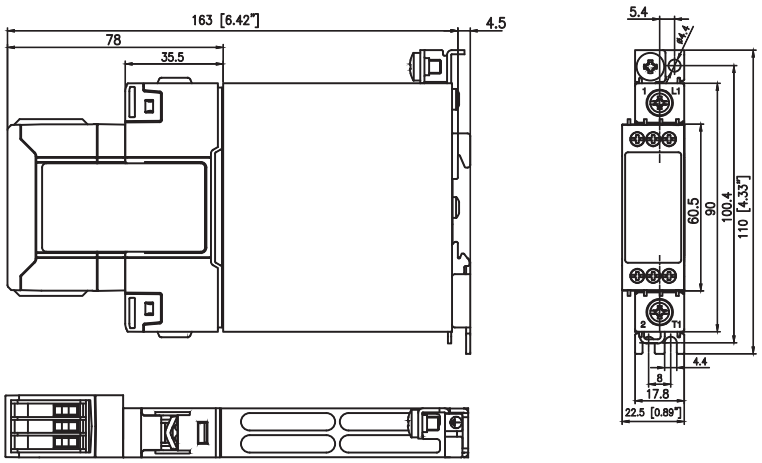

RGC1S60D25GKEP

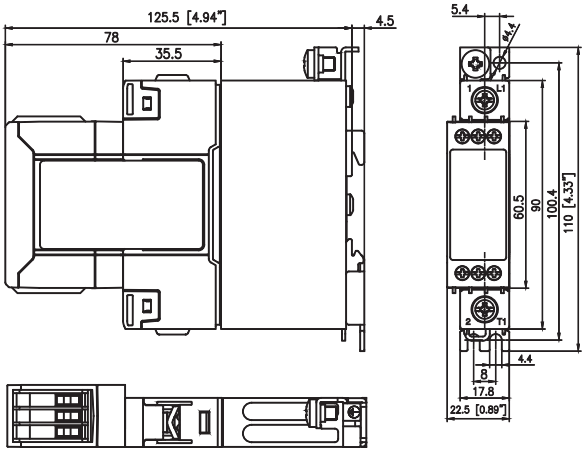

Housing width tolerance +0.5mm, -0mm…as per DIN43880
All other tolerances: ± 0.5mm
All dimensions in mm

Dimensions

RGC1S60D26GGEP

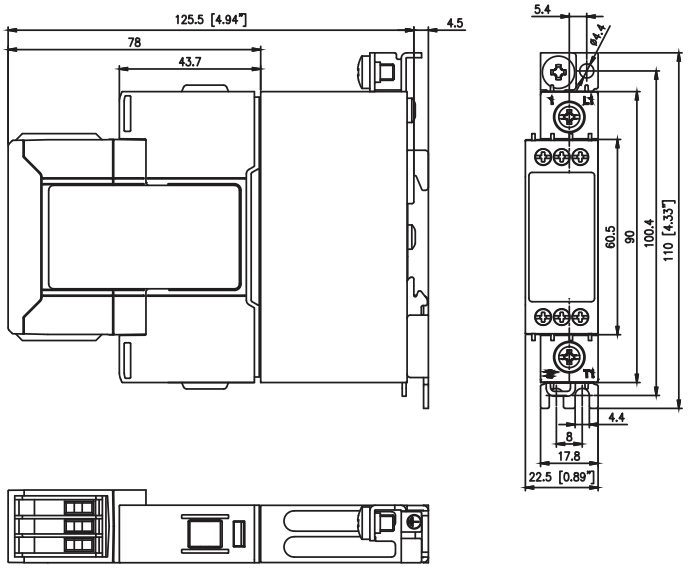

RGC1S60D30GKEP , RGC1S60D31GKEP

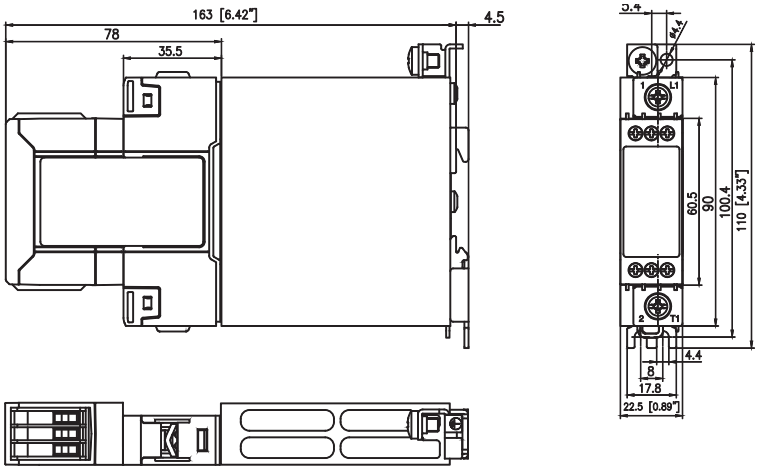

Housing width tolerance +0.5mm, -0mm…as per DIN43880
All other tolerances: ± 0.5mm
All dimensions in mm

Dimensions

RGC1S60D41GGEP

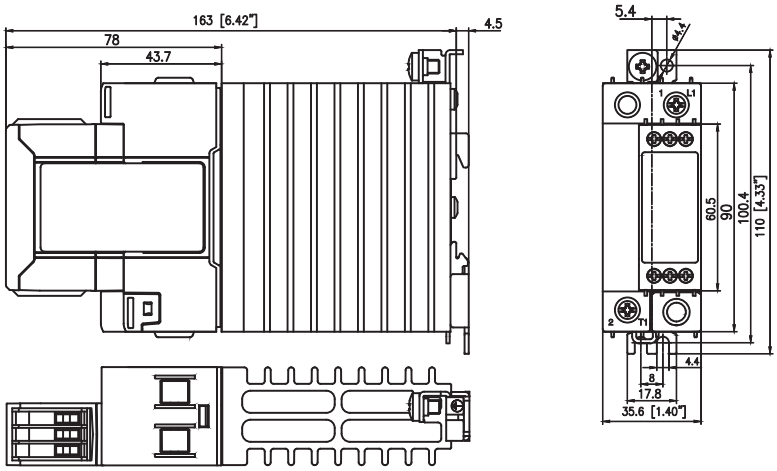

RGC1S60D61GGEP

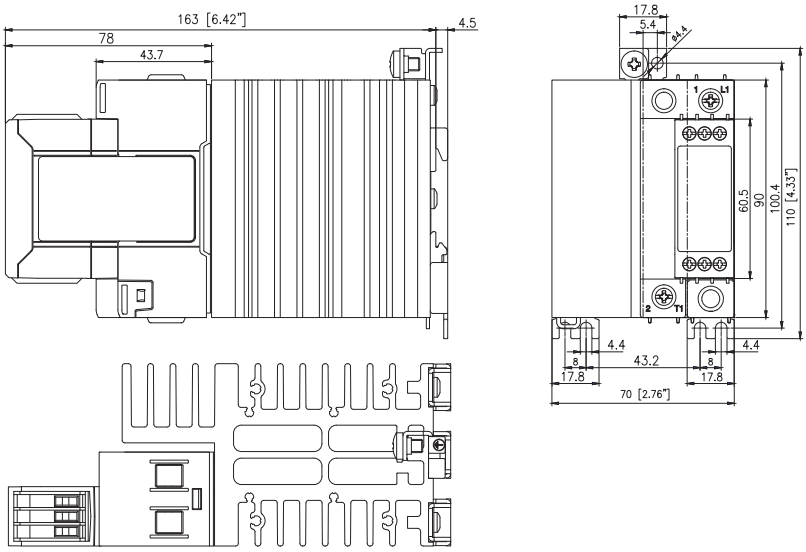

RGC1S60D90GGEP
(fan to be supplied externally - no terminations provided on the RG module)

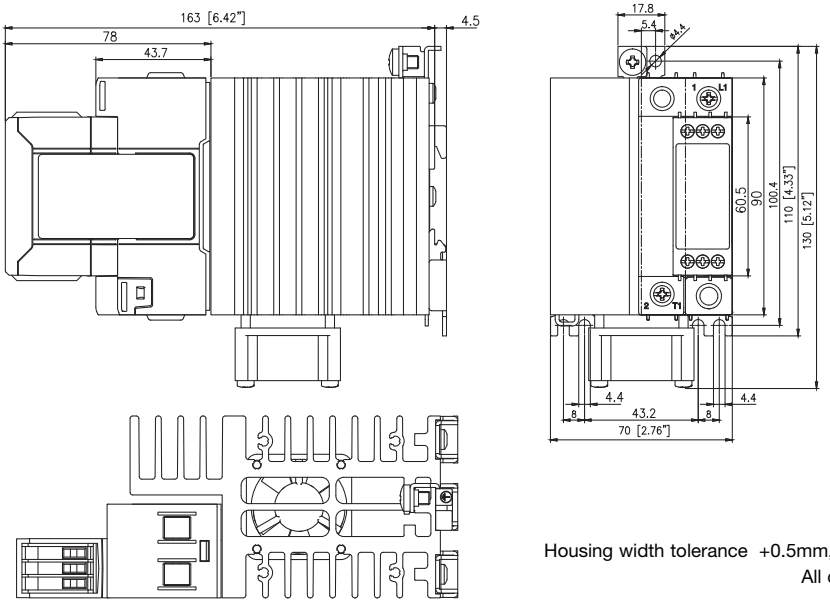

Housing width tolerance +0.5mm, -0mm…as per DIN43880
All other tolerances: ± 0.5mm
All dimensions in mm

Specifications are subject to change without notice (14.11.2016)

Dimensions

RGC1S60D41GGUP

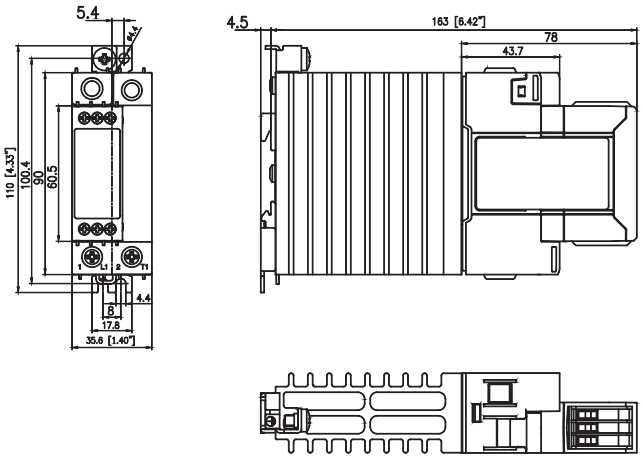

RGC1S60D61GGUP

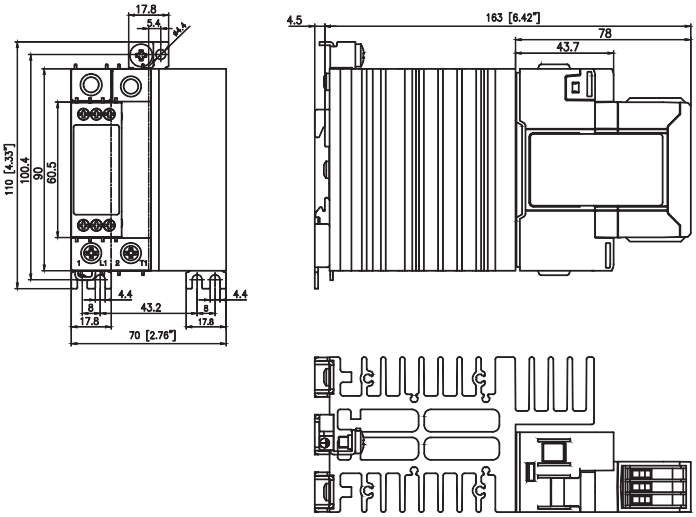

Housing width tolerance +0.5mm, -0mm…as per DIN43880
All other tolerances: ± 0.5mm
All dimensions in mm

Installation Instructions

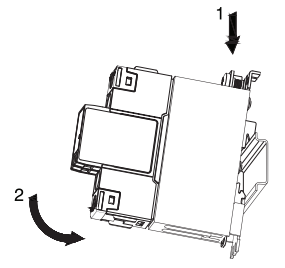

Mounting on DIN rail

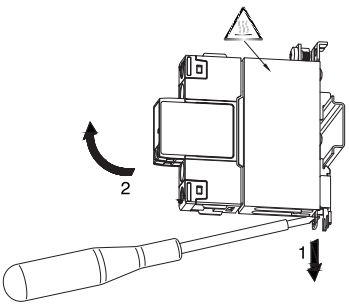

Dismounting from DIN rail

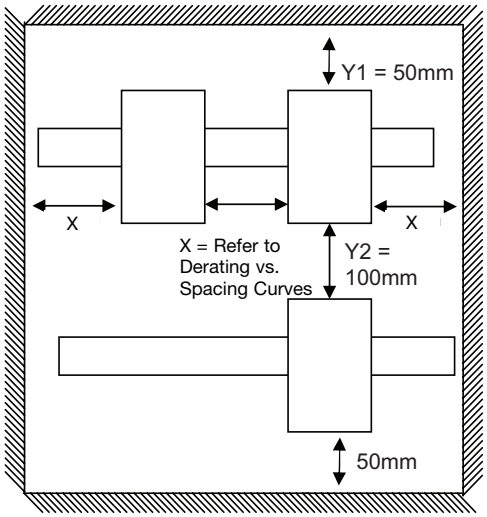

Short Circuit Protection

Protection Co-ordination, Type 1 vs Type 2:

Type 1 protection implies that after a short circuit, the device under test will no longer be in a functioning state. In type 2 co-ordination the device under test will still be functional after the short circuit. In both cases, however the short circuit has to be interrupted. The fuse between enclosure and supply shall not open. The door or cover of the enclosure shall not be blown open. There shall be no damage to conductors or terminals and the condcutors shall not separate from terminals. There shall be no breakage or cracking of insulating bases to the extent that the integrity of the mounting of live parts is impaired.
Discharge of parts or any risk of fire shall not occur.

The product variants listed in the table hereunder are suitable for use on a circuit capable of delivering not more than 100,000A rms Symmetrical Amperes, 600 Volts maximum when protected by fuses. Tests at 100,000A were performed with Class J fuses, fast acting; please refer to the table below for maximum allowed ampere rating of the fuse. Use fuses only.

Class CC fuses are represented by tests performed on Class J fuses.

Co-ordination type 1 (UL508)

Part No.	Max. fuse size [A]	Class	Current [kA]	Voltage [VAC]
RGC1S60D20GKEP	30	J or CC	100	Max. 600
RGC1S60D25GKEP	30	J or CC	100	Max. 600
RGC1S60D26GGEP	30	J or CC	100	Max. 600
RGC1S60D30GKEP	30	J or CC	100	Max. 600
RGC1S60D31GKEP	40	J	100	Max. 600
RGC1S60D41GG.P	90	J	100	Max. 600
RGC1S60D61GG.P	90	J	100	Max. 600
RGC1S60D90GGEP	90	J	100	Max. 600

Co-ordination type 2 (IEC/EN 60947-4-2/ -4-3)

Part No.	Prospective short circuit current [kArms]	Ferraz Shawmut		Siba		Voltage [VAC]
		Max fuse size [A]	Part number	Max fuse size [A]	Part number	
RG..20	10	40	6.6xx CP URD 22x58 /40	32	50 142 06.32	max. 600
	100	40	6.6xx CP URD 22x58 /40	32	50 142 06.32	max. 600
RG..25, 26, 30, 31	10	40	6.9xx CP GRC 22x58 /40	32	50 142 06.32	max. 600
	100	40	6.6xx CP URD 22x58 /40	32	50 142 06.32	max. 600
RG..41	10	63	6.9xx CP URC 14x51 /63	80	50 194 20.80	max. 600
	10	70	A70QS70-4	80	50 194 20.80	max. 600
	100	63	6.9xx CP URC 14x51 /63	80	50 194 20.80	max. 600
	100	70	A70QS70-4	80	50 194 20.80	max. 600
RG..61	10	100	6.9xx CP GRC 22x58 /100	100	50 194 20.100	max. 600
	10	100	A70QS100-4	100	50 194 20.100	max. 600
	100	100	6.621 CP URGD 27x60 /100	100	50 194 20.100	max. 600
	100	100	A70QS100-4	100	50 194 20.100	max. 600
RG..90	10	125	6.621 CP URQ 27x60 /125	125	50 194 20.125	max. 600
	10	125	A70QS125-4	125	50 194 20.125	max. 600
	100	125	6.621 CP URQ 27x60 /125	125	50 194 20.125	max. 600
	100	125	A70QS125-4	125	50 194 20.125	max. 600

Type 2 Protection with Miniature Circuit Breakers (M. C. B.s)

Solid State Relay type	ABB Model no. for Z - type M. C. B. (rated current)	ABB Model no. for B - type M. C. B. (rated current)	Wire cross sectional area [mm^2]	Minimum length of Cu wire conductor [m][8]
RG..20	**1 pole**			
	S201 - Z4 (4A)	S201 - B2 (2A)	1.0	21.0
	S201 - Z6 UC (6A)	S201 - B2 (2A)	1.0	21.0
			1.5	31.5
	1 pole			
RG..25	S201 - Z10 (10A)	S201-B4 (4A)	1.0	7.6
RG..30			1.5	11.4
			2.5	19.0
	S201 - Z16 (16A)	S201-B6 (6A)	1.0	5.2
			1.5	7.8
			2.5	13.0
			4.0	20.8
	S201 - Z20 (20A)	S201-B10 (10A)	1.5	12.6
			2.5	21.0
	S201 - Z25 (25A)	S201-B13 (13A)	2.5	25.0
			4.0	40.0
	2 pole			
	S202 - Z25 (25A)	S202-B13 (13A)	2.5	19.0
			4.0	30.4
RG ... 31	**1 pole**			
	S201 - Z20 (20A)	S201-B10 (10A)	1.5	4.2
			2.5	7.0
			4.0	11.2
	S201 - Z32 (32A)	S201-B16 (16A)	2.5	13.0
			4.0	20.8
			6.0	31.2
	2 pole			
	S202 - Z20 (20A)	S202-B10 (10A)	1.5	1.8
			2.5	3.0
			4.0	4.8
	S202 - Z32 (32A)	S202-B16 (16A)	2.5	5.0
			4.0	8.0
			6.0	12.0
			10.0	20.0
	S202 - Z50 (50A)	S202-B25 (25A)	4.0	14.8
			6.0	22.2
			10.0	37.0
RG..26, 41, 61, 90	**1 pole**			
	S201-Z32 (32A)	S201-B16 (16A)	2.5	3.0
			4.0	4.8
			6.0	7.2
	S201-Z50 (50A)	S201-B25 (25A)	4.0	4.8
			6.0	7.2
			10.0	12.0
			16.0	19.2
	S201-Z63 (63A)	S201-B32 (32A)	6.0	7.2
			10.0	12.0
			16.0	19.2

8. Between MCB and Load (including return path which goes back to the mains).

Note: A prospective current of 6kA and a 230/400V power supply system is assumed for the above suggested specifications. For cables with different cross section than those mentioned above please consult Carlo Gavazzi's Technical Support Group.