DIN Rail terminal blocks ／ SGK series

SG4K2.5

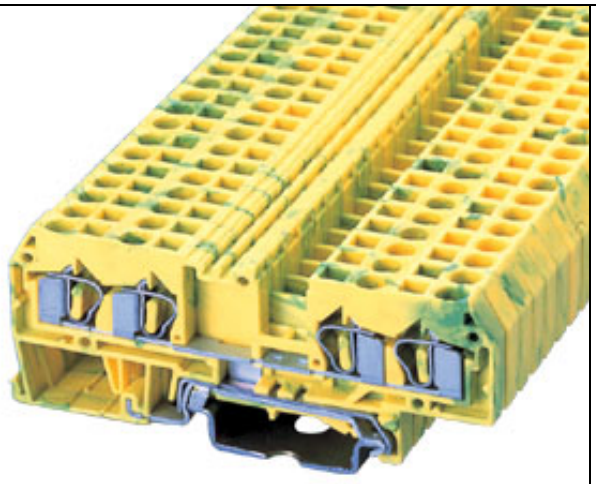

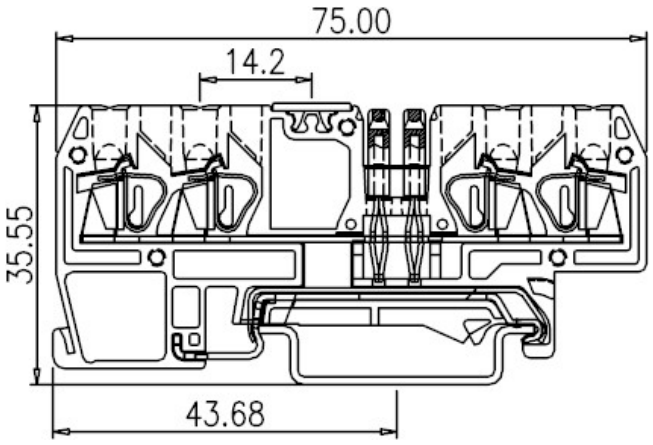

TxHxW(+0.2mm) 5.1x33.5x75

Approval		
Technical Data	UL	IEC
Rated voltage		800V
Rated current	20A	24A
Wire range		
Solid wire (AWG ｜ mm^2)	28~12	0.5~2.5
Stranded wire (AWG ｜ mm^2)	28~12	0.5~2.5
Rated surge voltage (UL/IEC/Max.)	2.2 / 3 / 8 KV	
Torque (Lb-in)		
Screw		
Wire strip length	8~9mm	

Accessories	Cat. No.
End cover	

TEL: +886-2-2908-0614 **FAX:** +886-2-2908-8549 **E-mail:** infor@dinkle.com.tw

Copyright .DINKLE ENTERPRISE CO., LTD. All Right Reserved.